Theoretic Mass(kg)		Revision	
Surface Area(dm2)		A4	

Thread	Hole	Shaft

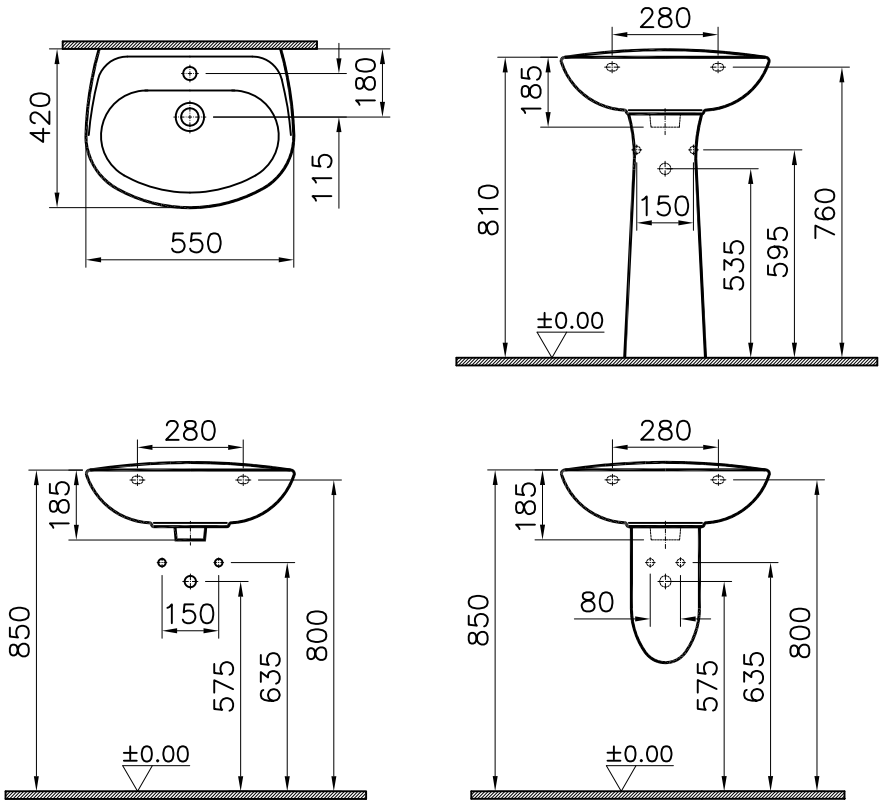

item	Quantity	Part Name	Drawing No	Material	Material Class
3	1	Pedestal	6915-0156	Ceramic	
2	1	Trap Cover	6948-1031	Ceramic	
1	1	Washbasin 55 cm	5087-1029	Ceramic	

This drawing can only be used for the intended purposes. Unauthorized copying is strictly prohibited.

Series	Material	Ceramic	Material Class
NORM	Washbasin 55 cm		

Drawn By	Controlled By	Approved By	Date	Drawing No	Scale
B.SENYUVA	U.AYDONER	B.TOPÇU	08.11.2006	5087+6948+6915	1/20

VitrA® | ARTEMA®

R.S	Description	Date	NAME
02	Replaces drawing dated 08.11.2006	23.09.2009	G.GULTER