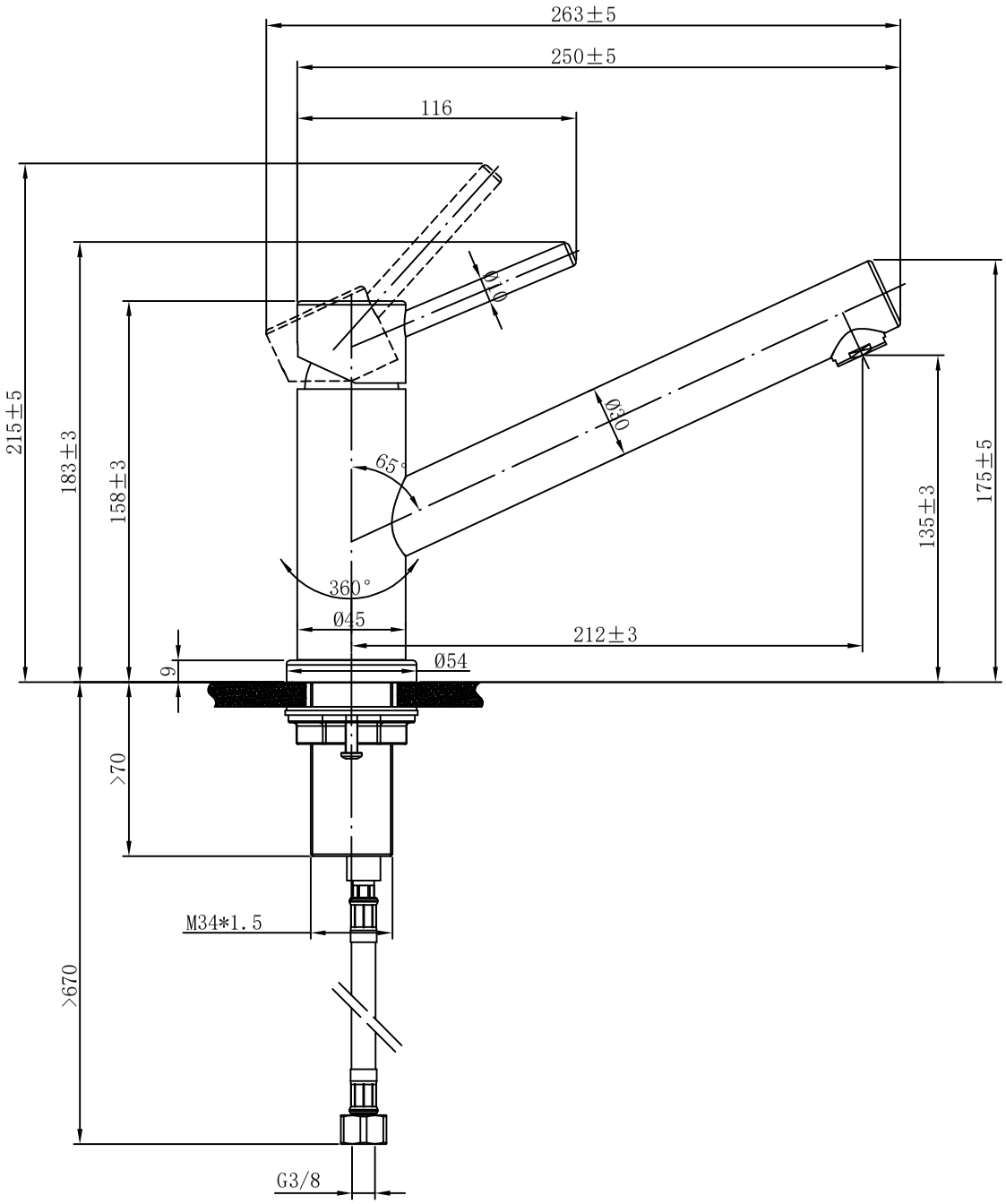


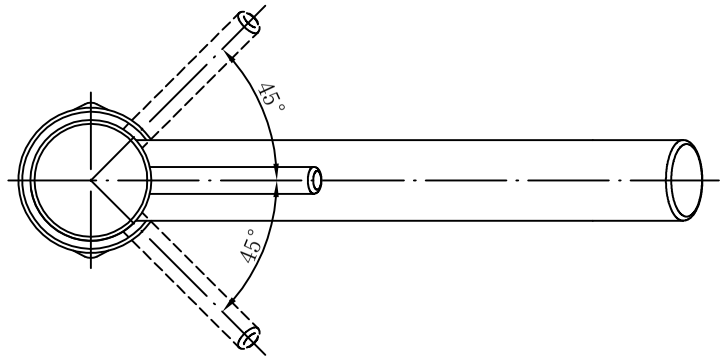


| | |
|---|---|
| [Como]<br>[925100] | Villeroy & Boch<br>1748 |
| V01/[20/05/2021] | |